ADS Letter of Transmittal

to

Holders of American Depositary Shares (ADSs)

Evidencing Shares of Common Stock
of
Mobile TeleSystems Public Joint Stock Company

Return of Cash to Holders of Shares of Common Stock and ADS Holders of Mobile TeleSystems Public Joint Stock Company (the "Company") by way of a Tender Offer by its Wholly-Owned Subsidiary Stream Digital, LLC (the "Offeror") for Common Stock (including Common Stock represented by ADSs) up to a Maximum Aggregate Purchase Amount of RUB 4,647,186,170 (US$77,959,842)

Under the terms of the Tender Offer, ADS Holders are invited to tender their ADSs in a price range of RUB 506.00 to RUB 566.00 per ADS inclusive (which as of January 17, 2017 was equivalent to approximately US$8.5 to US$9.5 per ADS, based on an exchange rate of US$1.00 to RUB 59.61), in increments of RUB 10.00 only (which as of January 17, 2017 was equivalent to US$0.17 based on the above referenced exchange rate). Ruble payment for the shares of Common Stock of the Company underlying the ADSs accepted by the Offeror will be converted by the ADS Tender Agent into US dollars (in the manner contemplated by the Deposit Agreement governing the ADS (the "Deposit Agreement") and paid to those ADS Holders whose ADSs are accepted for purchase (to the holder in cash, less any applicable withholding taxes and any applicable fees and expenses contemplated under the Deposit Agreement and without interest) on a per accepted ADS basis.

Dated January 17, 2017

CUSIP No. 607409109

THE TENDER OFFER IN RESPECT OF ADSs AND WITHDRAWAL RIGHTS WILL EXPIRE AT 5:00 P.M. NEW YORK CITY TIME, ON FEBRUARY 14, 2017 UNLESS THE TENDER OFFER IS EXTENDED.

The ADS Tender Agent for the Tender Offer is:

JPMorgan Chase Bank, N.A.

***By Mail: BY 5:00 P.M. New York time on February 14, 2017	***By Hand or Overnight Courier: BY 5:00 P.M. New York time on February 14, 2017
JPMorgan Chase Bank, N.A. Shareowner Services Voluntary Corporate Actions P.O. Box 64858 St. Paul, Minnesota 55164-0858	JPMorgan Chase Bank, N.A. Shareowner Services Voluntary Corporate Actions 1110 Centre Pointe Curve, Suite 101 Mendota Heights, Minnesota 55120

Delivery of this ADS Letter of Transmittal (this "ADS Letter of Transmittal") to an address other than as set forth above will not constitute a valid delivery to the ADS Tender Agent. THIS ADS LETTER OF TRANSMITTAL, PROPERLY COMPLETED AND DULY EXECUTED, TOGETHER WITH AMERICAN DEPOSITARY RECEIPT ("ADR") CERTIFICATES REPRESENTING ADSs BEING TENDERED (IN THE CASE OF CERTIFICATED ADRs) AND ALL OTHER REQUIRED DOCUMENTS MUST BE RECEIVED PRIOR TO 5:00 P.M. NEW YORK CITY TIME (THE "EXPIRATION TIME") ON FEBRUARY 14, 2017 (THE "ADS CLOSING DATE").

The Tender Offer is not being made, directly or indirectly, in or into, or by use of the mails of, or by other means (including, without limitation, facsimile transmission, email, telex and telephone), or via any facilities of a national securities exchange of Australia, Canada, Japan or any other jurisdiction where the making of the Offer to Purchase into or inside such jurisdiction would constitute violation of the laws of such jurisdiction.

Please be sure to read this ADS Letter of Transmittal and the accompanying instructions, together with the Offer to Purchase dated January 17, 2017 (the "Offer to Purchase"), carefully before you complete this ADS Letter of Transmittal.

DESCRIPTION OF ADSs TENDERED (SEE INSTRUCTIONS 3 AND 4)			
NAME(S) AND ADDRESS(ES) OF REGISTERED HOLDER(S) (PLEASE FILL IN, IF BLANK, EXACTLY AS NAME(S) APPEAR(S) ON ADR CERTIFICATE(S)) and/or ACCOUNT STATEMENT	ADR CERTIFICATES TENDERED (ATTACH ADDITIONAL SIGNED LIST, IF NECESSARY)		
	ADR Certificate Number(s) and/or indicate Book-Entry ADSs	Total Number of ADSs Represented by ADR Certificate(s)(1)	Number of ADSs Tendered(2)(3)
	Total ADSs Tendered		

(1) If ADSs are held in Book-Entry form you may leave this column blank.
(2) If ADSs are held in Book-Entry form, you must indicate the number of ADSs you are tendering.
(3) If your ADSs are evidenced by a physical certificate and you wish to tender fewer than all ADSs represented by any ADR certificate listed above, please indicate in this column the number of ADSs you wish to tender. Otherwise, all ADSs represented by ADR certificates delivered to the ADS Tender Agent will be deemed to have been tendered. See Instruction 4.

List above the ADR certificate numbers (if applicable), Book-Entry ADSs (if applicable) and number of ADSs to which this ADS Letter of Transmittal relates. If the space provided above is inadequate, list the ADR certificate numbers tendered on a separately executed and signed list and attach the list to this ADS Letter of Transmittal. The names and addresses of the holders should be printed exactly as they appear on the ADR certificates and/or ADS book entry statements, as the case may be, representing the ADSs tendered hereby. The number of ADSs that the undersigned wishes to tender should be indicated in the appropriate boxes.

This ADS Letter of Transmittal is to be used only if ADR certificates evidencing ADSs are to be forwarded herewith or if ADSs are held in book-entry form on the records of JPMorgan Chase Bank, N.A., as the ADS depositary (the "Depositary").

Your attention is directed in particular to the following:

1. If you want to retain your ADSs, you do not need to take any action.

2. If you want to participate in the tender offer and wish to maximize the chance of having shares of common stock of Mobile TeleSystems Public Joint Stock Company ("Common Stock") represented by ADSs you are tendering hereby accepted for purchase, you should check the box in the section entitled "ADSs Tendered at Strike Price Determined in the Tender Offer" in the section captioned "Price Per ADS at Which ADSs are Being Tendered" below and complete the other portions of this ADS Letter of Transmittal as appropriate.

3. If you wish to select a specific price at which you will be tendering your ADSs, you should select one or more of the boxes in the section captioned "ADSs Tendered at Price Determined by ADS Holder" in the box entitled "Price Per ADS at Which ADSs are Being Tendered" below and complete the other portions of this ADS Letter of Transmittal as appropriate.

In completing the form, please keep in mind that each ADS represents *TWO* shares of Common Stock and you will be completing the below on a per ADS basis rather than on a per share of Common Stock basis. Your bank or broker can assist you in completing this form. The instructions included with this ADS Letter of Transmittal must be followed. Questions and requests for assistance may be directed to the Information Agent and requests for additional copies of the Offer to Purchase and this ADS Letter of Transmittal may be directed to the Information Agent, whose address and telephone number appear at the end of this ADS Letter of Transmittal. See Instruction 9.

To JPMorgan Chase Bank, N.A.:

The undersigned hereby tenders to Stream Digital, LLC (the "Offeror"), a wholly-owned subsidiary of Mobile TeleSystems Public Joint Stock Company (the "Company"), the shares of Common Stock represented by the above-described ADSs at the price(s) for enumerated ADSs indicated in this ADS Letter of Transmittal, net to the seller in cash, less any applicable withholding taxes and any applicable fees and expenses contemplated under the Deposit Agreement and without interest, on the terms and subject to the conditions set forth in the Offer to Purchase, receipt of which is hereby acknowledged, and in this ADS Letter of Transmittal, which, as amended or supplemented from time to time, together constitute the tender offer.

Subject to and effective on acceptance for payment of the shares of Common Stock underlying the ADSs tendered hereby in accordance with the terms and subject to the conditions of the tender offer (including, if the tender offer is extended or amended, the terms and conditions of such extension or amendment), the undersigned hereby instructs the ADS Tender Agent to cancel all of the ADSs tendered hereby representing shares of Common Stock and sell, assign and transfer to, or upon the order of, the Offeror all right, title and interest in and to all such shares of Common Stock that are purchased pursuant to the tender offer to or upon the order of the Offeror and hereby irrevocably constitutes and appoints the ADS Tender Agent as the true and lawful agent and attorney-in-fact of the undersigned (with full knowledge that the ADS Tender Agent also acts as the agent of the Offeror with respect to such shares of Common Stock, with full power of substitution (such power of attorney being deemed to be an irrevocable power coupled with an interest), to:

(a) deliver shares of Common Stock represented by the ADSs, with all accompanying evidences of transfer and authenticity, to or upon the order of the Offeror upon receipt by the ADS Tender Agent, as the undersigned's agent, of the aggregate purchase price with respect to such shares of Common Stock;

(b) present such ADSs for cancellation on the Depositary's books; and

(c) receive all benefits and otherwise exercise all rights of beneficial ownership of shares of Common Stock represented by such ADSs and such ADSs, subject to the next paragraph, all in accordance with the terms and subject to the conditions of the tender offer.

The undersigned hereby covenants, represents and warrants to the Offeror that:

(a) the undersigned has full power and authority to tender, sell, assign and transfer the ADSs tendered hereby and that when and to the extent the Offeror accepts the shares of Common Stock represented by such ADSs for purchase, the Offeror will acquire good, marketable and unencumbered title to the tendered shares of Common Stock represented by such ADSs, free and clear of all security interests, liens, charges, encumbrances, conditional sales agreements or other obligations relating to their sale or transfer, and not subject to any adverse claim;

(b) on request, the undersigned will execute and deliver any additional documents deemed by the ADS Tender Agent, the Company or the Offeror to be necessary or desirable to complete the

assignment, transfer and purchase of the shares of Common Stock represented by such ADSs tendered hereby; and

(c) the undersigned agrees to all of the terms of the tender offer.

The undersigned understands that tendering of ADSs under any one of the procedures described in this ADS Letter of Transmittal will constitute a binding agreement between the undersigned and the Offeror upon the terms and subject to the conditions of the tender offer.

The undersigned understands that, on the terms and subject to the conditions of the tender offer, a single purchase price per share of Common Stock, not greater than RUB 283.00 nor less than RUB 253.00 per share of Common Stock (equating to not greater than RUB 566.00 nor less than RUB 506.00 per ADS) will be determined, that the Offeror will pay for shares of Common Stock (including shares of Common Stock underlying ADSs) properly tendered and not properly withdrawn prior to the expiration time of the tender offer, taking into account the number of shares of Common Stock (including shares of Common Stock underlying ADSs) so tendered and the prices specified by tendering Common Stock and ADS holders. The undersigned understands that the purchase price per share of Common Stock will be the lowest purchase price that will allow the Offeror to buy the maximum number of shares of Common Stock for a total cost not exceeding RUB 4,647,186,170, or such lesser number of shares of Common Stock as are properly tendered and not properly withdrawn, at prices not greater than RUB 283.00 nor less than RUB 253.00 per share of Common Stock, equating to not greater than RUB 566.00 nor less than RUB 506.00 per ADS, in the tender offer. The undersigned understands that all shares of Common Stock underlying ADSs properly tendered prior to the expiration time at prices at or below the purchase price and not properly withdrawn will be purchased at the purchase price to the seller in cash, less any applicable withholding taxes and any applicable fees and expenses contemplated under the Deposit Agreement and without interest, on the terms and subject to the conditions of the tender offer, including its proration provisions, and that all other ADSs will be returned free of charges by the Company, the Offeror and the ADS Tender Agent, including ADSs tendered at prices greater than the purchase price and not properly withdrawn prior to the expiration time and ADSs not purchased because of proration.

The undersigned recognizes that under certain circumstances set forth in the Offer to Purchase, either the Offeror or the Company may terminate or amend the tender offer or may postpone the acceptance for payment of, or the payment for, the shares of Common Stock underlying ADSs that have been tendered or may accept for payment fewer than all of the shares of Common Stock underlying ADSs tendered hereby. In such event, the undersigned understands that any ADSs delivered herewith but with respect to which the underlying shares of Common Stock are not tendered or not purchased, will be recorded in book-entry form on the register of the ADS holders maintained by the Depositary, which shall mail a statement to the tendering ADS holder noting the number of returned ADSs.

The name(s) and address(es) of the registered holder(s) should be printed, if they are not already printed above, exactly as they appear on the ADR certificates representing ADSs and/or on a statement reflecting ADSs held in book-entry form on the records of the Depositary, in each case, that are tendered hereby. The ADR certificate numbers, the number of ADSs represented by such ADR certificates and the number of ADSs that the undersigned wishes to tender (including any/all ADSs held in book-entry form on the records of the Depositary) should be set forth in the appropriate boxes above. The price at which the ADSs are being tendered should be indicated in the appropriate box below.

Unless otherwise indicated under "Special Payment Instructions," please issue the check for the purchase price of any shares of Common Stock underlying ADSs purchased (less the amount of any federal income or backup withholding tax required to be withheld), in the name(s) of the undersigned.

Unless otherwise indicated under "Special Delivery Instructions," please record in book-entry form on the register of the ADS holders maintained by the Depositary for ADSs with respect to which the underlying shares of Common Stock are not tendered or not purchased (and accompanying documents,

as appropriate) and mail a statement noting the number of returned ADSs to the undersigned at the address shown below the undersigned's signature(s).

The undersigned understands that acceptance of shares of Common Stock represented by ADSs by the Offeror for payment will constitute a binding agreement between the undersigned and the Offeror on the terms and subject to the conditions of the tender offer. The undersigned acknowledges that no interest will be paid on the purchase price for the shares of Common Stock represented by tendered ADSs.

All authority conferred or agreed to be conferred in this ADS Letter of Transmittal shall survive the death or incapacity of the undersigned, and any obligation or duties of the undersigned under this ADS Letter of Transmittal shall be binding upon the heirs, personal representatives, executors, administrators, successors, assigns, trustees in bankruptcy and legal representatives of the undersigned. Except as stated in the Offer to Purchase, this tender is irrevocable.

PLEASE READ ACCOMPANYING INSTRUCTIONS CAREFULLY.
METHOD OF DELIVERY

LOST OR DESTROYED ADR CERTIFICATE(S)

If any ADR certificate representing ADSs has been lost, destroyed or stolen, the ADS holder should promptly notify the Depositary. The ADS holder will then be instructed as to the steps that must be taken in order to replace the ADR certificate. This ADS Letter of Transmittal and related documents cannot be processed until the procedures for replacing any lost or destroyed ADR certificate have been followed. ADS holders are requested to contact the Depositary immediately in order to permit timely processing of this documentation. See Instruction 12.

PRICE PER ADS
AT WHICH ADSs ARE BEING TENDERED
(SEE INSTRUCTION 5)

Check only *ONE* box under (1) or (2) below. If both boxes or if no box is checked, there is no valid tender of ADSs.

1. ADSs Tendered at Strike Price Determined in the Tender Offer

☐ In checking this box, the undersigned hereby confirms they want to maximize the chance of having all shares of Common Stock represented by all ADSs being tendered hereby accepted for purchase (subject to the possibility of proration). Accordingly, BY CHECKING THIS BOX INSTEAD OF ONE OR MORE OF THE PRICE BOXES IN (2) BELOW, the undersigned hereby tenders such ADSs at, and is willing to accept, the strike price determined in the tender offer in accordance with the terms of the tender offer and resulting from the tender offer process. This action may have the effect of lowering the purchase price and could result in receiving a price per ADS as low as RUB 506.00 per ADS.

OR

2. ADSs Tendered at Price Determined by ADS Holder

☐ In checking this box, the undersigned instructs the ADS Tender Agent to cancel the ADSs representing shares of Common Stock and to sell each such Common Stock to the Offeror at one-half of the Tender Price(s) specified below (each ADS representing two shares of Common Stock and the prices below shown on a per ADS basis) on the terms and conditions set out in the Offer to Purchase.

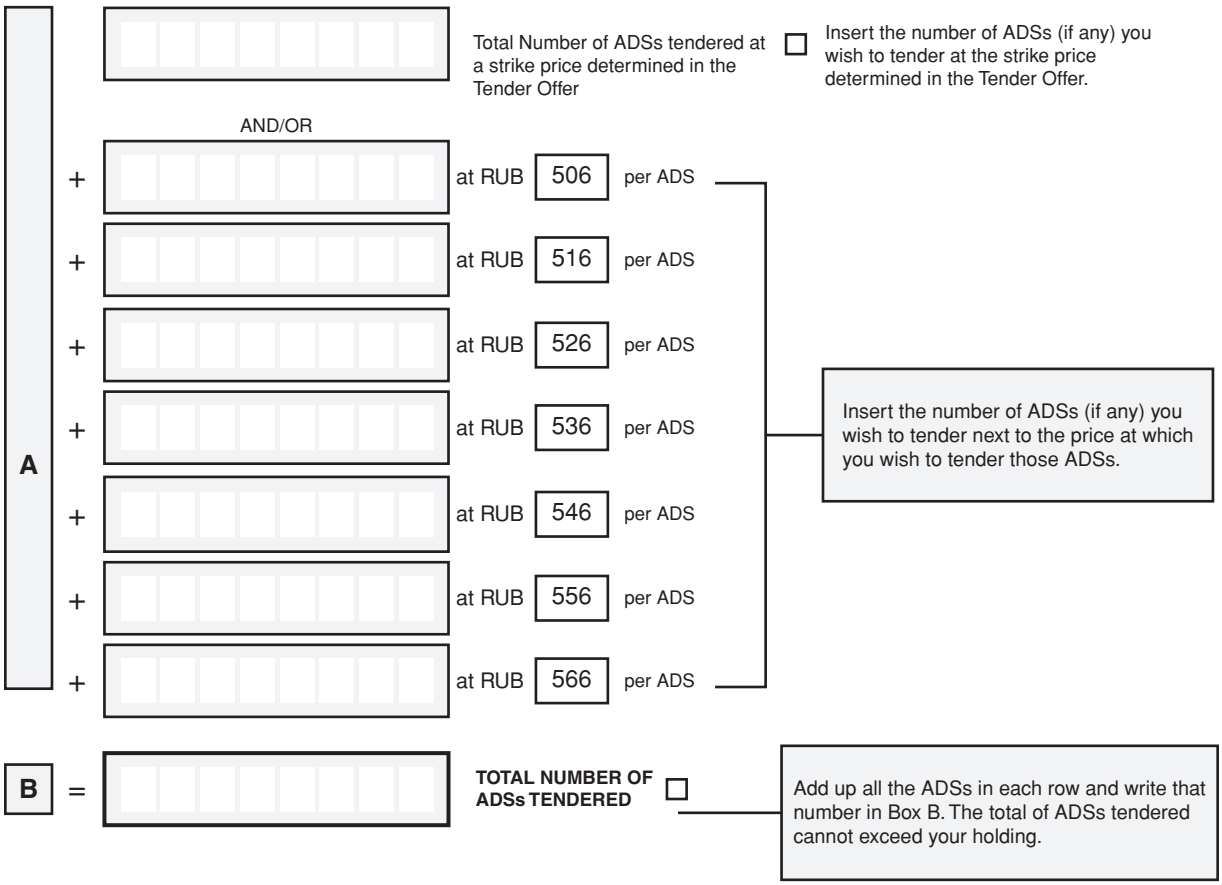

IMPORTANT NOTE REGARDING PAYMENT WITH RESPECT TO TENDERED ADSs

Under the terms of the Tender Offer, ADS Holders are invited to tender their ADSs in a price range of RUB 506.00 to RUB 566.00 per ADS inclusive (which as of January 17, 2017 was equivalent to approximately US$8.5 to US$9.5 per ADS, based on an exchange rate of US$1.00 to RUB 59.61), in increments of RUB 10.00 only (which as of January 17, 2017 was equivalent to US$0.17 based on the above referenced exchange rate). Ruble payment for the shares of Common Stock of the Company underlying the ADSs accepted by the Offeror will be converted by the ADS Tender Agent into US dollars (in the manner contemplated by the Deposit Agreement governing the ADS (the "Deposit Agreement") and paid over to those ADS Holders whose ADSs are successfully tendered (net to the seller in cash, less any applicable withholding taxes and any applicable fees and expenses contemplated under the Deposit Agreement and without interest) on a per accepted ADS basis.

ADS Holders should be aware that the US dollar/ruble exchange rate that is prevailing on the date on which ADSs are tendered may be different than the US dollar/ruble exchange rate applied in connection with the conversion. In all cases, fluctuations in the US dollar/ruble exchange rate are at the risk of the tendering ADS Holders who will receive their consideration in US dollars and ADS Holders will bear the currency conversion costs. For further information on the conversion of currency, see Instruction 12.

SPECIAL PAYMENT INSTRUCTIONS
(SEE INSTRUCTIONS 1, 4, 6 AND 7)

To be completed ONLY if the check for the purchase price is to be issued in the name of someone other than the undersigned.

Name: _____
(PLEASE PRINT)

Address: _____

_____

_____

_____
(INCLUDE ZIP CODE)

(RECIPIENT MUST COMPLETE IRS FORM W-9, OR THE APPROPRIATE IRS FORM W-8)

SPECIAL DELIVERY INSTRUCTIONS

To be completed ONLY if the check for the purchase price and/or book-entry statement reflecting any unaccepted ADSs are to be mailed or sent to someone other than the undersigned or to the undersigned at an address other than that designated above.

Name: _____
(PLEASE PRINT)

Address: _____

_____

_____

_____
(INCLUDE ZIP CODE)

IMPORTANT

ADS HOLDERS MUST SIGN HERE
AND
COMPLETE IRS FORM W-9, OR THE APPROPRIATE IRS
FORM W-8

(Must be signed by registered holder(s) exactly as name(s) appear(s) on ADR certificate(s) or on the ADSs register or on a security position listing or by person(s) authorized to become registered holder(s) by certificates and documents transmitted herewith. If signature is by a trustee, administrator, guardian, attorney-in-fact, agent, officer of a corporation, or other person acting in a fiduciary or representative capacity, please state full title and see Instruction 6.)

X _____

X _____

SIGNATURE(S) OF REGISTERED HOLDER(S) OR AUTHORIZED SIGNATORY

Dated: _____

Name(s): _____

_____

(PLEASE PRINT)

Capacity (full title): _____

_____

Address: _____

(INCLUDING ZIP CODE)

Taxpayer Identification or Social Security Number: _____

APPLY MEDALLION GUARANTEE STAMP BELOW
(See Instructions 1 and 6)

INSTRUCTIONS
FORMING PART OF THE TERMS AND CONDITIONS OF THE TENDER OFFER

1. *Guarantee of Signatures.* No signature guarantee is required if this ADS Letter of Transmittal is signed by the registered holder of the ADSs exactly as the name of the registered holder appears on the ADR certificate(s) for the ADSs tendered with this ADS Letter of Transmittal or, in the case of book-entry ADSs, on the records of the Depositary, and payment and delivery are to be made directly to such registered holder and such registered holder has not completed the box entitled "Special Payment Instructions". Also, see Instruction 6.

2. *Delivery of ADS Letter of Transmittal.* You must use this ADS Letter of Transmittal to forward ADR certificates for ADSs and to tender any/all ADSs held in book-entry form on the records of the Depositary. ADR certificates for all physically tendered ADSs along with a properly completed and duly executed ADS Letter of Transmittal, including any required signature guarantees, and any other documents required by this ADS Letter of Transmittal, should be mailed or delivered to the ADS Tender Agent at the appropriate address set forth herein and must be delivered to the ADS Tender Agent on or before the expiration time.

ADS LETTERS OF TRANSMITTAL MUST BE RECEIVED IN THE OFFICE OF THE ADS TENDER AGENT BY THE EXPIRATION TIME ON THE ADS CLOSING DATE. DELIVERY OF THESE DOCUMENTS TO THE ADS TENDER AGENT'S POST OFFICE BOX ON OR PRIOR TO SUCH TIME DOES NOT CONSTITUTE RECEIPT BY THE ADS TENDER AGENT. The method of delivery of all documents, including ADR certificates for ADSs, is at the option and risk of the tendering ADS holder. If delivery is by mail, registered mail with return receipt requested, properly insured, is recommended. In all cases, sufficient time should be allowed to assure timely delivery.

The Offeror will not accept any alternative, conditional or contingent tenders, nor will it purchase the shares of Common Stock represented by any fractional ADSs. By executing this ADS Letter of Transmittal (or a facsimile of it), you waive any right to receive any notice of the acceptance for payment of the ADSs.

3. *Inadequate Space.* If the space provided in the box entitled "Description of ADSs Tendered" above is inadequate, the certificate numbers and/or the number of ADSs should be listed on a separate signed list and attached to this ADS Letter of Transmittal.

4. *Partial Tenders.* If fewer than all of the ADSs evidenced by any ADR certificate are to be tendered, fill in the number of ADSs that are to be tendered in the column entitled "Number of ADSs Tendered" in the box entitled "Description of ADSs Tendered" above. In that case, if any shares of Common Stock underlying tendered ADSs are purchased, the remainder of the ADSs that were not tendered along with any ADSs not purchased in the tender offer will be issued in book entry form and a statement therefor sent to the registered holder(s) at the address of record on the ADS register maintained by the Depositary, unless an alternate address is specified in the box entitled "Special Delivery Instructions" above, promptly after the expiration time. Unless otherwise indicated, all ADSs set forth on page 1 of this ADS Letter of Transmittal and delivered to the ADS Tender Agent will be deemed to have been tendered. In each case, ADSs will be returned or credited free of charges by the Company, the Offeror or the ADS Tender Agent to the ADS holder.

5. *Indication of Price at Which ADSs are Being Tendered.* In order to validly tender by this ADS Letter of Transmittal, you must complete the box entitled "Price (in ruble amounts) Per ADS at Which ADSs are Being Tendered" by either (1) checking the box in the section captioned "ADSs Tendered at Strike Price Determined in the Tender Offer" or (2) checking the box in the section captioned "ADSs Tendered at Price Determined by ADS Holders" and inserting the number of ADSs you wish to tender in the box(es) corresponding to the per ADS price(s) in the section captioned "ADSs Tendered at Price Determined by ADS holder" indicating the price(s) (on a per ADS basis) at which you are tendering ADSs. Selecting option (1) could result in you receiving a price per ADS as low as RUB 506.00. Selecting option (2) could result in none of the shares of Common Stock represented by ADSs you tender being purchased if the purchase price (as calculated on a per ADS basis) for the shares of Common Stock represented by ADSs turns out to be less than the price(s) you selected.

You may only select from (1) or (2). If you check box (1) and insert any number of ADSs under (2) or do nothing, then you will not be deemed to have validly tendered your ADSs. You cannot tender the same ADSs more than once, unless you previously tendered ADSs and validly withdrew those ADSs, as provided in Section VII of the Offer to Purchase.

6. *Signatures on ADS Letter of Transmittal; Stock Powers and Endorsements.*

(a) If this ADS Letter of Transmittal is signed by the registered holder(s) of the ADSs tendered hereby, the signature(s) must correspond exactly with the name(s) as written on the face of the ADR certificate(s), or if the ADSs tendered hereby are registered in book-entry form, exactly as recorded on the register of ADS holders maintained by the Depositary, without any change whatsoever.

(b) If the ADSs tendered hereby are registered in the names of two or more joint holders, each such holder must sign this ADS Letter of Transmittal.

(c) If any tendered ADSs are registered in different names on several ADR certificates or recorded in different names on the register of ADS holders maintained by the Depositary, it will be necessary to complete, sign and submit as many separate ADS Letters of Transmittal as there are different registrations of ADR certificates or as appear on the ADS register. To obtain additional copies of this ADS Letter of Transmittal, contact the Information Agent at the telephone number and address included on the back cover of this ADS Letter of Transmittal.

(d) When this ADS Letter of Transmittal is signed by the registered holder(s) of the ADSs tendered hereby, no endorsement (s) of ADR certificate(s) representing such ADSs or separate stock power(s) are required unless payment is to be made to a person other than the registered holder(s) thereof. Signature(s) on such ADR certificate(s) or separate stock power(s) must be guaranteed by a participant in the Securities Transfer Agents Medallion Program, the New York Stock Exchange Medallion Program or the Stock Exchanges Medallion Program (an "Eligible Institution").

If this ADS Letter of Transmittal is signed by a person other than the registered holder(s) of an ADR certificate(s) or the registered holder of book-entry ADSs presented hereby, or if payment is to be made to a person other than the registered holder(s) thereof, such ADR certificate(s) must be endorsed or accompanied by appropriate stock power(s) and appropriate stock power(s) must be presented in respect of any book-entry ADS in any such case signed exactly as the name(s) of the registered holder(s) appears on the ADR certificate(s) or on the register of ADS holders maintained by the Depositary, and the signature(s) on such ADR certificate(s) or stock power(s) must be guaranteed by an Eligible Institution. See Instruction 1.

(e) If this ADS Letter of Transmittal or any ADR certificate(s) or stock power(s) are signed by a trustee, executor, administrator, guardian, attorney-in-fact, officer of a corporation or any other person acting in a fiduciary or representative capacity, such person should so indicate when signing this ADS Letter of Transmittal and must submit proper evidence satisfactory to the Offeror of such person's authority so to act.

7. *Special Payment.* If check(s) are to be issued in the name of a person other than the signer of this ADS Letter of Transmittal, signatures must be guaranteed as described in Instructions 1 and 6.

8. *Irregularities.* All questions as to the number of ADSs to be accepted, the price to be paid therefor and the validity, form, eligibility, including time of receipt, and acceptance for payment of any tender of ADSs will be determined by the Offeror in its sole discretion, which determination shall be final and binding on all parties. The Offeror reserves the absolute right to reject any or all tenders of ADSs it determines not to be in proper form or the acceptance of which or payment for which may, in the opinion of the Offeror's counsel, be unlawful. The Offeror has the right to waive certain of the conditions of the tender offer, as set forth in the Offer to Purchase, which waiver will apply to all properly tendered ADSs. The Offeror also reserves the right to waive any defect or irregularity in any tender with respect to any particular ADSs or any particular ADS holder, and the Offeror's interpretation of the terms of the tender offer, including these Instructions, will be final and binding on all parties. No tender of ADSs will be deemed to be properly made until all defects and irregularities have been cured by the tendering ADS holder or waived by the Offeror. Unless waived, any defects or irregularities in connection with tenders must be cured within such time as the Offeror shall determine. None of the Offeror, the Company, the ADS Tender Agent, the Information Agent or any other person is or will be obligated to give notice of any defects or irregularities in tenders and none of them will incur any liability for failure to give any such notice.

9. *Questions and Requests for Assistance and Additional Copies.* Questions and requests for assistance should be directed to, or additional copies of the Offer to Purchase, this ADS Letter of Transmittal, and other related materials may be obtained from, the Information Agent at the telephone number and address set forth on the back cover of this ADS Letter of Transmittal. You may also contact your broker, dealer, commercial bank or trust company for assistance concerning the tender offer.

10. *Information Reporting and Backup Withholding.* The discussion set forth below is included for general information only. Each ADS holder is urged to consult such ADS holder's tax advisor to determine the particular tax consequences to such ADS holder (including the applicability and effect of state, local and other tax laws) of the tender offer. Certain ADS holders may be subject to special rules not discussed below. The discussion does not consider the effect of any applicable foreign, state, local, or other tax laws. ADS holder should review the section of the Offer to Purchase entitled "United States Federal Income Taxation" for a more general discussion of certain U.S. federal income tax considerations that may be relevant to the tender offer.

Payments made to tendering ADS holders may be subject to U.S. federal information reporting and backup withholding. Under United States federal income tax laws, the ADS Tender Agent will be required to withhold 28% of the amount of the purchase price paid to certain ADS holders who do not provide their Taxpayer identification Number (TIN). To avoid such backup withholding, each such ADS holder that is a U.S. person for U.S. federal income tax purposes must provide the ADS Tender Agent with such ADS holder's TIN and certify that such ADS holder is not subject to backup withholding by completing an Internal Revenue Service ("IRS") Form W-9, or otherwise establish to the satisfaction of the ADS Tender Agent that such ADS holder is not subject to backup withholding. Certain U.S. payees (such as corporations, government agencies, financial institutions, etc.) are considered exempt payees and are not subject to these backup withholding requirements. If an ADS holder provides an incorrect TIN, such ADS holder may be subject to penalties imposed by the IRS. Failure to provide the information on the IRS Form W-9 may subject the payee to a penalty imposed by the IRS and backup withholding on any payment. In order for an ADS holder that is not a U.S. person for U.S. federal income tax purposes to qualify as an exempt recipient and avoid backup withholding, such ADS holder must submit an IRS Form W-8BEN or IRS Form W-8BEN-E (or other applicable IRS Form and any additional documentation as required), signed under penalties of perjury, attesting to that ADS holder's exempt status. IRS Form W-9 or IRS Forms W-8 can be obtained from the ADS Tender Agent.

11. Lost, Stolen, Destroyed or Mutilated ADR Certificates. If your ADR certificate(s) for part or all of your ADSs has been lost, stolen, destroyed or mutilated, you should promptly call the Depositary at (800) 990-1135 regarding the requirements for replacement of the ADR certificate. You may be asked to post a bond to secure against the risk that the ADR certificate may be subsequently recirculated. This ADS Letter of Transmittal and related documents cannot be processed until the

procedures for replacing lost, stolen, destroyed or mutilated ADR certificates have been followed. You are urged to contact the Depositary immediately to ensure timely processing of documentation.

12. In connection with the conversion of foreign currency into U.S. dollars, JPMorgan Chase Bank, N.A. ("JPMorgan") shall deduct out of such foreign currency the fees, expenses and other charges charged by it and/or its agent (which may be a division, branch or affiliate) so appointed in connection with such conversion. JPMorgan and/or its agent may act as principal for such conversion of foreign currency. For further details see https://www.adr.com.

The Information Agent for the Offer is:

Georgeson LLC,

If you have questions on how ADS Holders can participate in the Tender Offer, please call the Information Agent, Georgeson LLC, on number +1 866-257-5415 (toll-free within the United States).